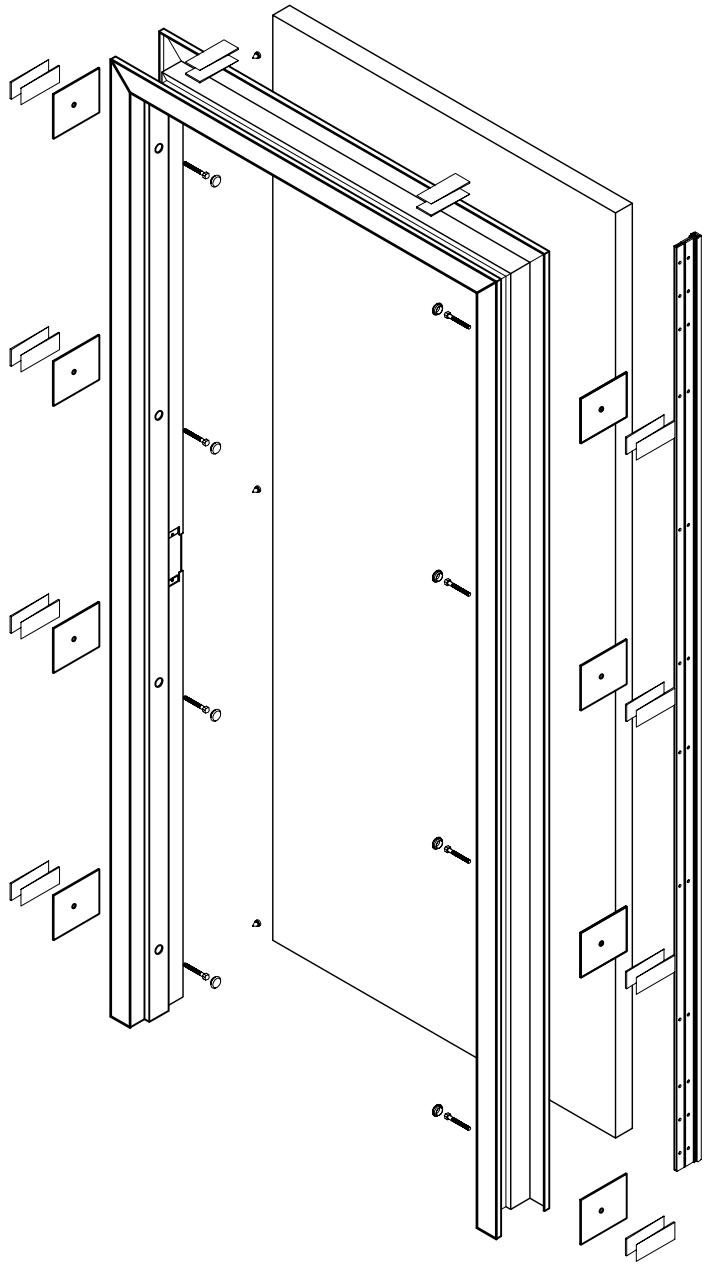

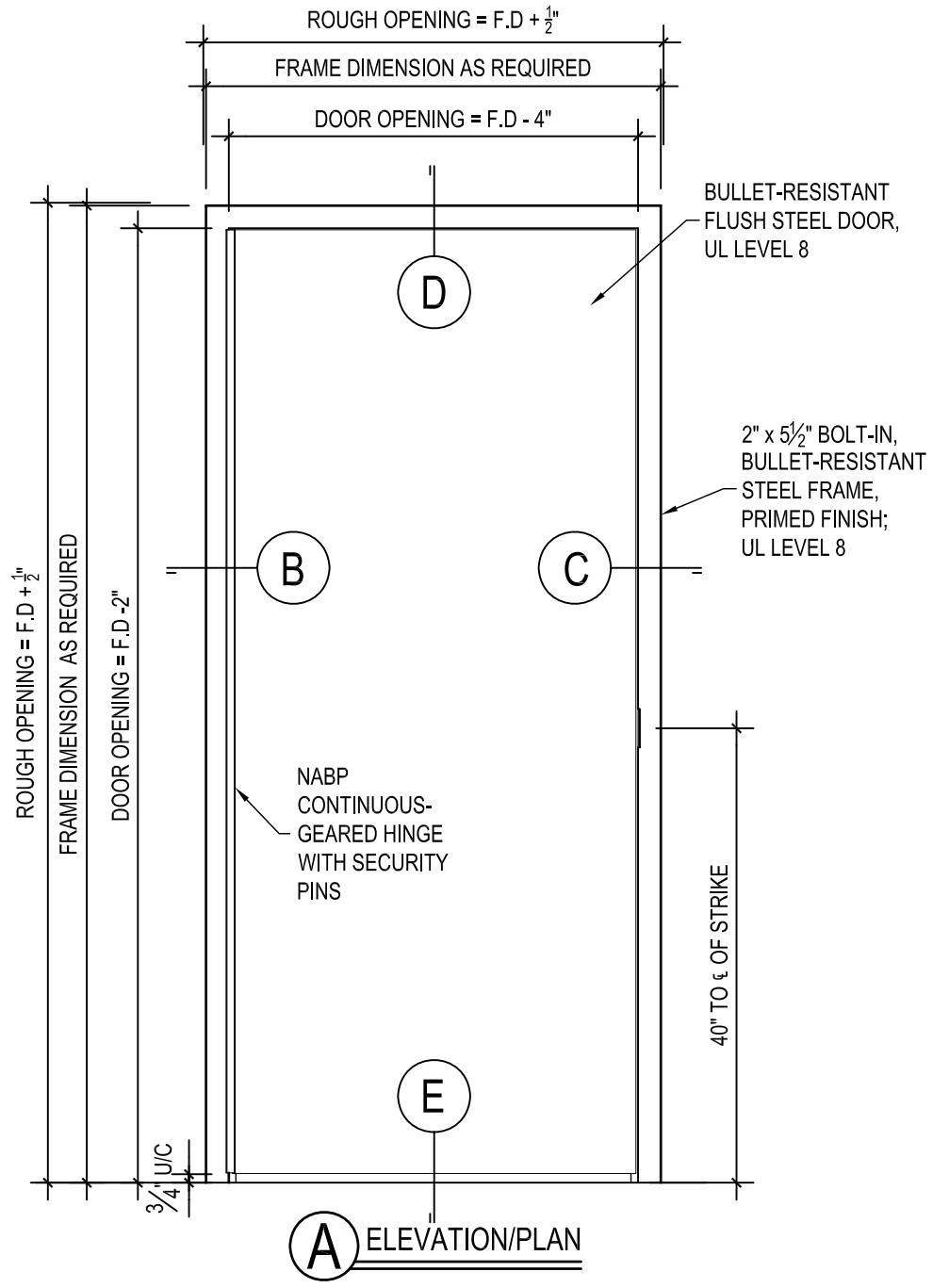

A ELEVATION/PLAN

KEYNOTES:

- 02-1 2" x 5-1/2" BOLT-IN DOORFRAME: 12 GA. STEEL, PRIMED FINISH; UL LEVEL 8
- 02-3 4-3/4" x 4" ANCHOR PLATE: 12 GA. STEEL, PRIMED FINISH
- 02-7 CONTINUOUS -GEAR HINGE WITH SECURITY PINS
- 02-8 PRIMED FINISH FLUSH STEEL DOOR, UL LEVEL 8
- 01-1 DECORATIVE ANCHOR-HOLE PLUG
- 01-3 TYPICAL WALL CONSTRUCTION (BY OTHERS)
- 01-4 ANCHOR, AS REQUIRED (BY OTHERS)
- 01-5 BULLET-RESISTANT ARMOR, UL LEVEL 8 (WHERE REQUIRED)

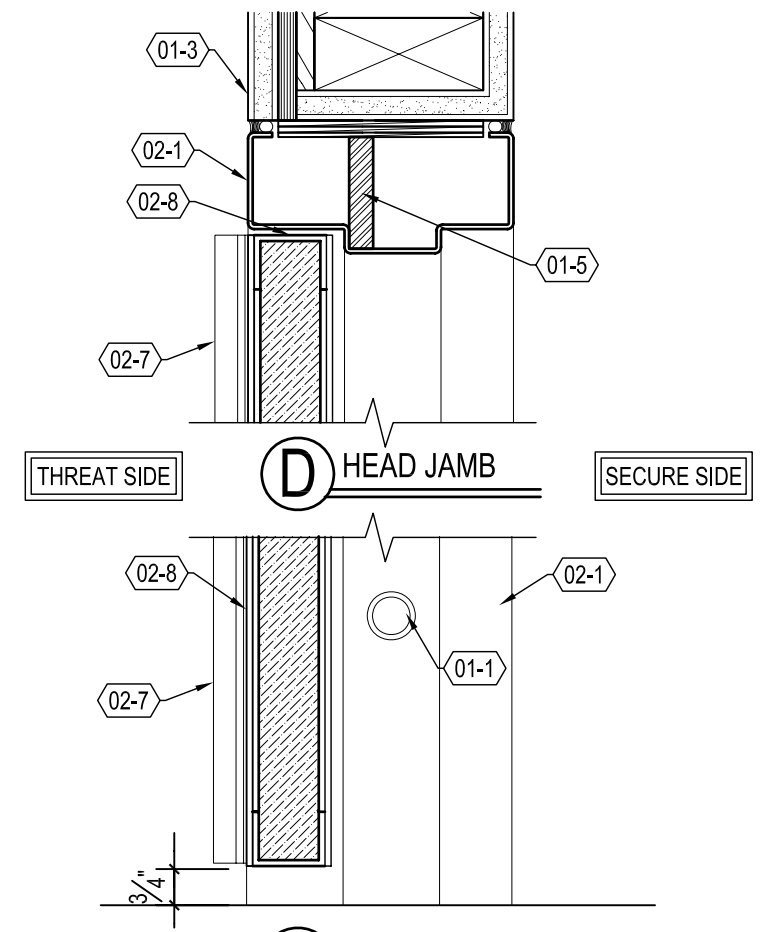

D HEAD JAMB

E SILL

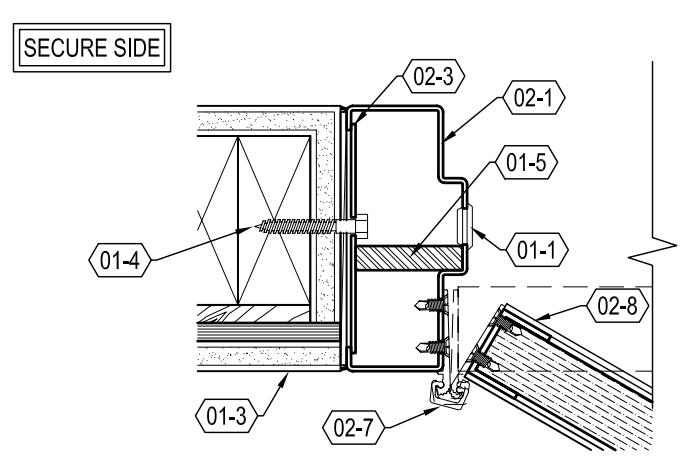

B HINGE SIDE JAMB

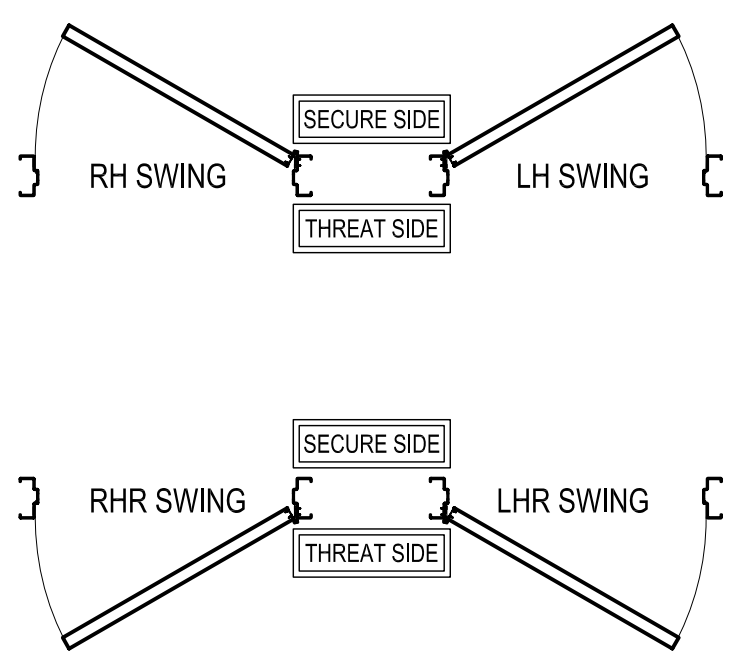

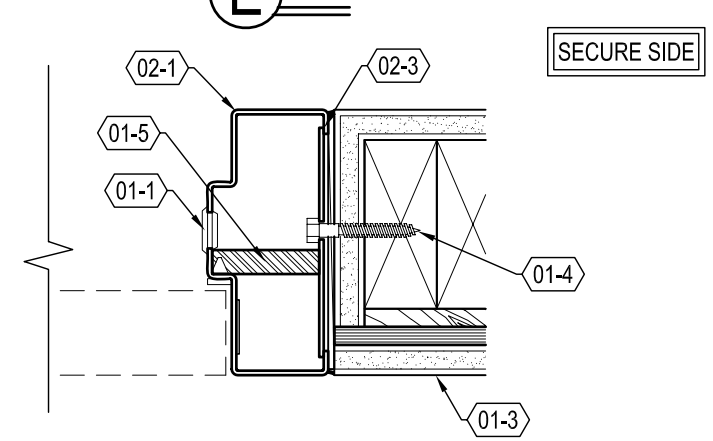

C LOCK SIDE JAMB

NORTH AMERICAN BULLET PROOF

NABP
P.O BOX 628
106 GUADALUPE DRIVE
CIBOLO TX, 78108
PHONE # (210) 225-0982
FAX # (210) 225-0984
WEBSITE: www.nabulletproof.com

ALL RIGHTS RESERVED:

THIS DRAWING IS THE PROPERTY OF NORTH AMERICAN BULLET PROOF AND SHALL NOT BE REPRODUCED IN WHOLE OR PART. IT SHALL NOT BE USED FOR CONSTRUCTION OF OTHER THAN THE SPECIFIED PROJECT WITHOUT WRITTEN PERMISSION OF NORTH AMERICAN BULLET PROOF.

COMMENTS:

SDR8-OP-P-BF